STATUS 状态:
JV 11/09/2015 - RELEASED ON ECO: 500012733

TV INTERFACE

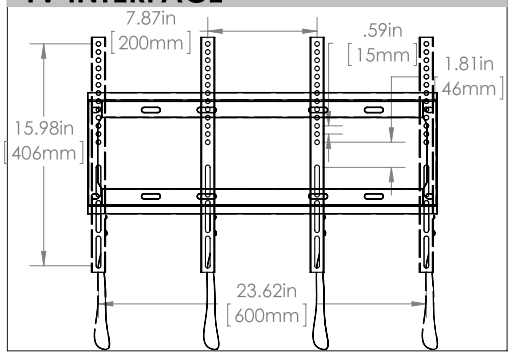

secura

Large Tilt Mount
6805-002201-XXX

THE INFORMATION AND DESIGNS CONTAINED IN THIS DRAWING ARE CONFIDENTIAL AND THE PROPRIETARY PROPERTY OF MILESTONE AV TECHNOLOGIES NEITHER THIS DESIGN NOR ANY INFORMATION CONTAINED IN THIS DRAWING MAY BE REPRODUCED OR DISCLOSED TO OTHERS WITHOUT THE EXPRESS WRITTEN CONSENT OF MILESTONE AV TECHNOLOGIES. 本图纸所包含的信息和设计均系Milestone机密和知识产权，本图纸包含的设计和信息在未经Milestone允许情况下均不得复制或者泄露

3-D

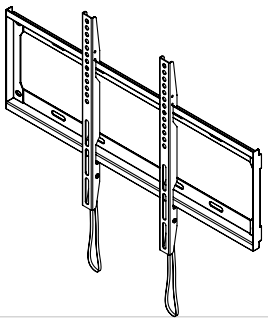

WALL PLATE

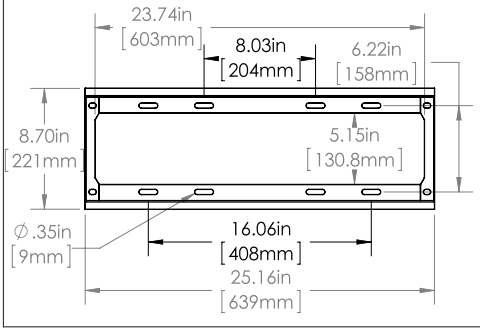

TOP VIEW - EXTENDED

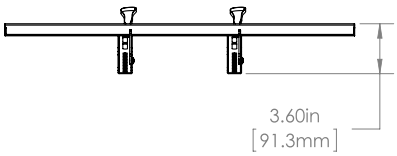

SIDE VIEW - EXTENDED

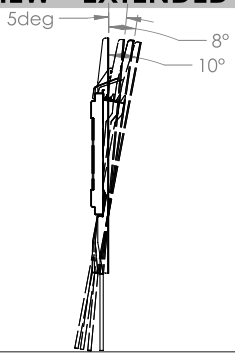

FULLY ASSEMBLED MOUNT

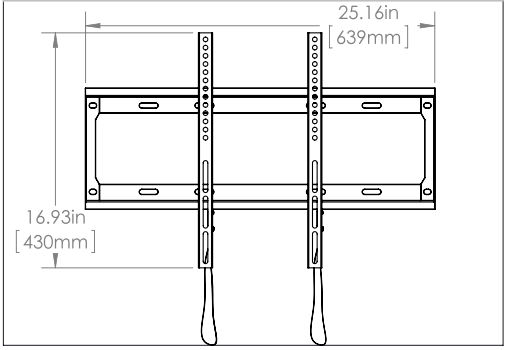

TOP VIEW - RETRACTED

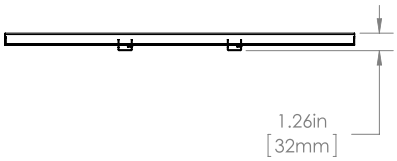

SIDE VIEW - RETRACTED